PORTFOLIO ADVANCE

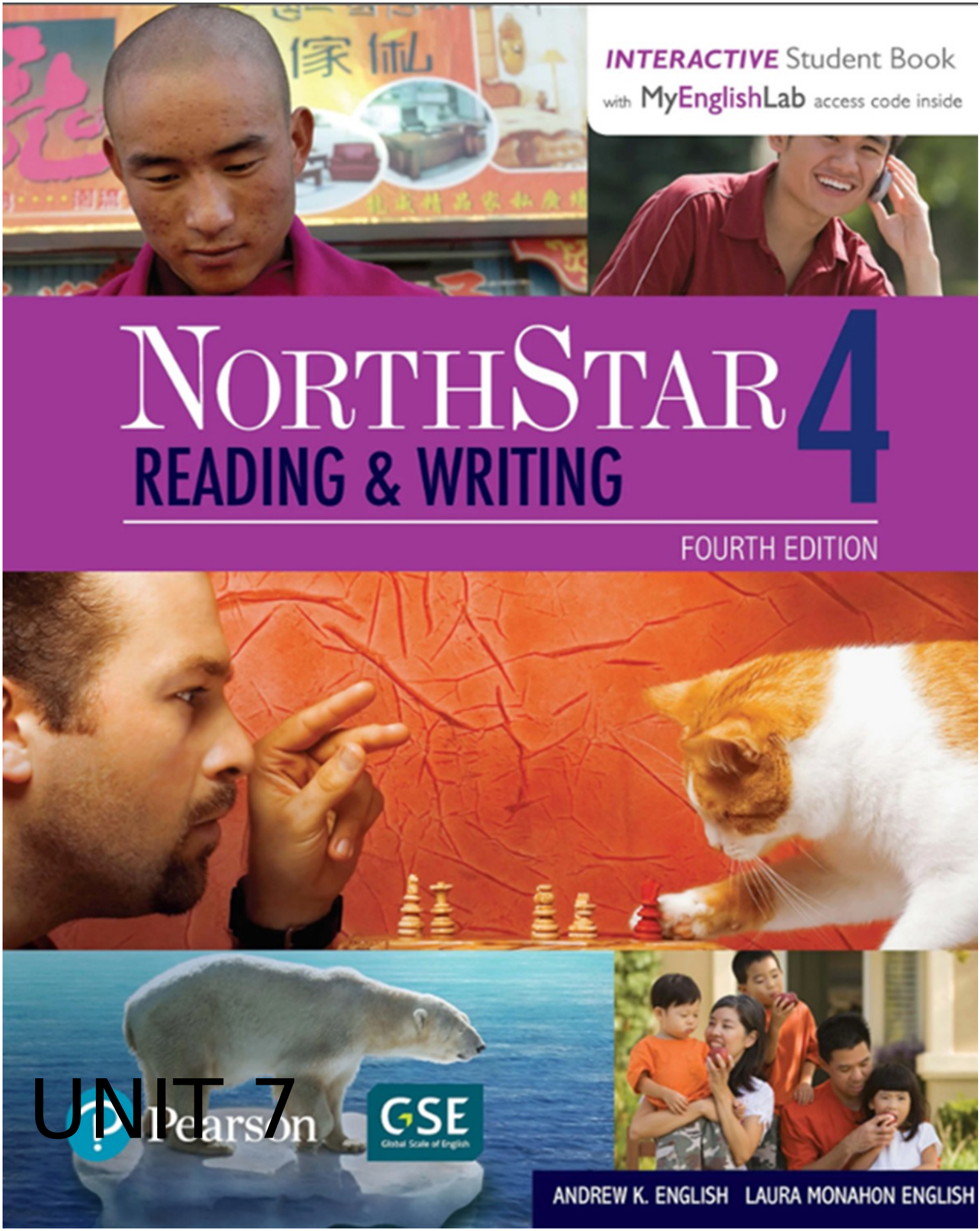

UNIT 7

ONLINE CLASSES	FACE TO FACE CLASSES
ADVENTAGES -It is possible to take classes where you want and when you want. -You can film the class and watch it after. -It is more comfortable. -It helps to save money. -The information on the internet is able for students because they can use internet to find information suring classes time.	ADVENTAGES -They can improve they capacity to retain information. -They can develop their capacity to present attention. -They can't find information on internet during clases, so they have to think more. -The teacher have a enhance knowledge about the students. -The direct socialisation enhance the capacity to interact and participate in group. -Tou can be guide by the teacher.
DISADVENTAGES -It could hinder social skills to interact face to face and make Friends. - The students can get distracted quickly because on the internet they can access to other other apps.	DISADVENTAGES - If in a classroom there are a lot of students, will be necessary for teaching them too many hours, and maybe their doubts will not be all answered. - The classes aren't filmed, so if you are absent from a class, you will not watch it after.

POINTS TO COMPARE/ CONTRAST	ONLINE CLASSES	FACE TO FACE CLASSES
Where the class take place.	You can take classes where you want if you have internet.	It is obligatory to go to a school, university center or institute.
When the class take place.	There is a schedule to take classes, but also it is posible to take classes when you want because it is filmed.	The schedule isn't flexible, you can't be absent.
Socialization.	You socialize through social networks.	You socialize face to face because you need to make Friends to do projects.
Mode student-teacher comunication.	The teacher uses virtual apps and virtual meeting to interact with students, also they interact with emails.	In the classroom the interaction is direct, if you have doubts you have to ask.
Differences when studying.	During virtual classes you can use internet pages and the works or homeworks are made in words documents. Also you review the clases at power point.	You have to copy the class in a workbook and study reading books.
Different skills developed.	It helps you to improve habilities to use digital apps and use the technology to make easier the study method.	Social skills are enhanced to be sociable.

FIRST DRAFT WRITING 1

Face to face clases and virtual clases. Wich one is better? The technology has been enhancing since internet and computer were invented. The pandemic was a crucial period in the lasts years that collaborated to analyze divers posibilities to take clases from home, and virtual classes or as it is know “oline classes” became in the first option. Nowadays they are used in a lot of countries. Face to face classes and online clases are very different because the time, place, socialization, student-teacher communication, skills develop and differences when studying are significantly different.

The classes take place in different places depending if it is online or face to face. In online classes you can take it where you want, in your bed, sofa, desk, etc., but you should have internet for that. In contrast, to take face to face classes you ahve to go to the school, university or institute, ther is no way to take it if you don’t go to these places. For example; When the pandemic started, online classes was permitted for goverments to study. The president said that the national schools were enabled to make clases in online apps. I can remember that at this time we didn’t go to the school, but we studied at home.

The time is important to take face to face clases, but for online clases the time is flexible. In face to face classes the teacher gives us an Schedule with the time of classes and it is obligatory to be punctual, on the other hand in online classes the time isn’t much important because it depends on you, also how it is filmed you can check it when you want. But it is abvious that internet is important to do it because if the class isn’t filmend or the internet is wake, you will loose the class.

The socialization between online and face to face clases is very different and the methods to interact are also different. In online clases you have to have social network and apps like zoom, mettins, Skype, and etc., because your classmates could live in another country or city. Now I can see why once time my brother said, “Mom buy me a cellphone to do do my project with my classmates.” While in face to face classes to do a homework or just make Friends you don’t have to be shy, you have to speak, and speak a lot. That is the most significant difference betweent them. The socialization is both are divers and different.

The mod student-teacher communication is really different. Although in virtual classes the teacher has to use chatrooms, virtuales meetings, forums, whatsapp and email, in face to face classes you have to write in a book or in a paper and present it to the teacher. The makes many disputes between students because some of them

consider that writing in a paper in better because you learn more whereas another one said, “using technology is better because you can learn about the issue and learn how to use technology.” What we can asaverate is that both ways are ways to get knowledge.

The students use different ways to study depending if they study online or face to face. In a classroom you can’t use technological devices whiles you can use them in online classes. Also at school you have to read books and to do homeworks or researches you have to read a lot, and many times it isn’t enough. However, in online classes as teacher can’t see you, you can use your cellphone or just open google and write about what can you want to read, also you can find researches that you can use. It makes study esear.

To conclude, Online clases and face to face clases are complety different, since how to socialize and different ways to study.

FINAL WRITING 1

Face-to-face classes and virtual classes. What are their differences? The technology has been enhancing since internet and computer were invented. The pandemic was a crucial period in the last years that collaborated to analyze divers posibilities to take classes from home, and virtual classes or as it is know "online classes" became in the first option. Nowadays they are used in a lot of countries. Face-to-face classes and online classes are very different because the time, place, socialization, student-teacher communication, skills developed and differences when studying are significantly different.

The classes take place in different places depending if it is online or presential. In online classes you can take it where you want, in your bed, sofa, bed, dest, etc., but you should have internet for that. In contrast, to take face to face classes you have to to school, university center or institute. There is no way to take it if you don't want to go to these places. For example; When the pandemic started, online classes were permitted for goverments to study. The president said that the national schools were enabled to make classes in online apps. I can remember that at this time we didn't go to school, but we studied at home.

The time is important to take face-to-face classes, but for online classes that time is flexible. In face-to-face classes the teacher gives us an schedule with the time of classes, and it is obligatory to be punctual. On the other hand, in online classes the time isn't much important because it depends on you, also how it is filmed you can check it when when you want, but it is obvious that internet is important to do it because if the class isn't filmed or the internet is wake, you will loose the class.

The socialization between online and face-to-face classes is very different and the methods to interact are also different. In online

classes you have to have social network and apps like zoom, metting, skype, etc., because your classmates could live in another country or city. Now I can see why once time my brother said, "Mom buy me a cellphone to do my project with my classmates." On the other hand, in face-to-face classes to do a homework or just make friends, you don't have to be shy., you have to speak, and speak a lot. That is the most significant difference between them. The socialization in both are divers and different, but in presential classes the student improve social ksills to make friends.

The mod student-teacher communication is divers, but they're also different. In virtual classes the teacher has to use chatrooms, virtual mettings, forums, whatsapp and emails. However, in face-to-face classes you have to write in a book ir in a paper and present it to the teacher. That makes many dipute between students because some of them consider that writing in a paper is better because you lear more. Whereas another one said, "Using technology is better because you can learn about the issue and how to use technology devices." What we can asaverate is that both ways are good to get knowledge.

The students use different ways to study depending if they study online or face-to-face. In a classroom you can't use technological devices whiles you can use them in online classes. Also at school you have to read books and to do homewroks or researches you have to read a lot, and many times it isn't enough. However, in online classes as teacher can't see you, you can use cellphones or just open google and write about what you want to know. Also you can find researches that you can use. It make study esear than face-to-face.

To conclude, online classes and face to face classes are completely different, such as we can see, the interactions between students and teacher-student aren't similar,the way to study, where and when it take place are significantly different. I am really impresed about their differences and how technology collaborated to have new ways to study. As Elon Musk said, "The develop of technology is changing everything in the world, and the educations system will change sooom."

UNIT PROJECT 1

QUESTIONS:

1. **How long has this model of distance learning been in existence?**
   Video conferences started to appear around the mid-20th century, being exactly It would be in 1964.

2. **Where and how did it originate?**

Video conferences originated in the mid-20th century, with a demonstration of the AT&T Picturephone at the 1964 World's fair in New York. This early attempt allowed us to see each other while speaking over telephone lines.

3. **How is the course delivered? What technology is necessary?**
   This course is delivered through online platforms that use real-time video and audio communication between the students and the teacher or teachers. Usually a student requires a laptop, microphone, camera, and internet to take the class without problems.

4. **Do/Did students have to be in "class" at a specific time?**
   Normally video conferences have a predetermined schedule that students had to choose when they registered for the course, but there might be some flexibility that has to be provided by the teacher.

5. **Where does/did student learning take place?**
   Students can take classes from anywhere as long as they have a device such as a laptop, cell phone or tablet with access to a camera and internet connection.

6. **How do/did the students and teachers interact?**
   Students and teachers interact through the video conference, being able to turn on the microphone and write in the chat.

7. **Can/could students interact with other students? If so, how?**
   There is definitely interaction between students. There are many opportunities for smaller group calls for work sessions or projects. Smaller settings encourage more conversation. They´re also easier to manage and small enough for everyone to be quiet and brainstorm without causing interruptions.

8. **Where are/were the students from?**
   Students can be from different parts of the world. In this way, they can learn more cultures and their social environment increases.

Questions that I answered:

9. **Who is/was allowed to take the course? Do/Did you have to be a high school graduate or enrolled in college?**
   Only graduated students of high school are allowed to take a course of video conferencing because it is like a technical career, and to take it you need to finish the high school. That is the most important requirement.

10. **What is/was the cost of the course?**
    The cost of the course is about $400 in most institutes, but in private universities it is about $600.

11. **Do/Did students receive credit for the course?**

Yes, they do. When they finish the course, they have to send to the institute or university an personal informations and what were their experiences during the course. Then the institute or university has to certificate your credit and pot it in their virtual page, also they have to send it to your email.

TEXT:

Video conferencing. Virtual distance learning in the last years became in one of the most important ways to study as a result of the pandemic. Hopefully, the technology has improved and many schools, institutes and universities started to use video conferencing to take classes. Now around the world virtual conference is accepted as a good way to study and there is an increase of the demand of video conferencig in many countries in South America. About it I look for who is allow to take the course and requirements, how much does it cost, and if the student recive a credit for the course. I can find those informations on virtual pages of institutes that take courses of virtual conferencing, for example; Senati, UTP, etc.

Video conference started in 1964 in New York, now it is delivered through online platforms that use internet to communicate people in real-time video and audio. Teacher and students caan use it to take clases, but you should have a computer or another device. It take place where you want, but there are scheduls that you have to choose. About the questions: First; about who is allowed to take the course, I could find that only the people who finished ori s graduated of hisgh school can take it. That is the most important requirement because take that course and finish it is like to have a technical carreer. Second, about its cost I find information that say that its cost was $400 at institutes, but at university its cost is about $600-700. Finally, the student recive a cridt for the course from the institute or university: First they ask you for your personal information, then you have to write about your experience taking the course and finally they post your crdit in their virtual page, also they send it to your email.

Concluding, video conferencing is a good option to study after finish high school because it is cheap and you can live working of it because when you finish to take the course you recive a credit that allow you to work as a technical support of the virtual platform or as a techer, so if you don’t know what to do you can take a course about it. I beleave that the method of learning is changing quickly and major at Video conference could be the clue to work in a near future. We don’t know if in the future will be a pandemic as Covid, but we are sure that virtual learning is a reality and there are a lot of people who want to learn at home, so it is a good option to take a course of video conference.

Vocabulary words	Definition	Sentence

Commencement	The begining of somthing.	Although many students didn’t take the final exam last year, there was many students in the commencement of classes this year.
Clues	Something that guide you to make a correct conclution.	The police with the help of detective, who discovered the clues of the crime, saved the person in danger.
Reconstructed	Built again.	Stonemasons have reconstructed this building for three years.
Spontaneous	When something appears suddenly	We were at the cinema and he arrived spontaneously because he wanted to talk with us.
Dialogue	When two or more people talk about an issue for a long time.	A famous archeologist found papers with dialogues between Platon and Aristoteles.
Scornful	A person with an attitud that shows indifference.	The last month she talked scornfully to my brother because he got a low grade in the exam.
Geography	The discipline of the science that study the rolds related to societies.	At school, in geography subject, I learned about global warming and the influence of industries on this problem.
Viewpoints	Diverse opinions that come from different people about an issue.	I was able to appreciate different viewpoints about socialism in the las class of economy at university.
Loftily	Feeling of superiority in front of others.	My family doesn’t want to invite my

UNIT 8

		uncle to pass time at christmas because he expressed loftily talking about us.
Audience	A certain mount of people who are in a public ativity or follow a tv chanel.	When the musician made an espectacular performance, the audience claps strongly to the musician.

REFLECTION PAPER 1

At the begining of that unit I felt nervouse because I knew that I needed to practice a lot. Preparing the research paper and organizing my ideas with a graphic organizer I felt confident. My problem at the moment to write my first writing was the gramar section because I didn’t remember well it. During the writing one I felt confident, I think I was able to use vocabulary words and grammar expressions. I really believe that the graphic organizer helped me a lot to overcome the dificulties and do a good writing. I think every activity of that unit helped me to achieve the goal of the unit.

RESEARCH PAPER TWO

Negative effects of techonology use in children:

1.-The OMS says that more than 70% of children. who use Smartphones, are diagnosed with anxienty and depresión.

2.- Children are experienced an increase of percentage from attention deficiency, aggressivity, and dependency of devices.

3.- Increase of cyberbullying by not knowing to use with responsibility the social network.

4.-Decrease of creative abilities and creativity.

5.-Wrong development of motrice ability.

6.-Increase of abesity.

7.-Generative a sedentary live in children who are suposed to have an active live.

8.-Problems with skills to socialize.

8.-Generates a dependence of cellphones. In other words, its use becomes adicted.

9.-Children when using a technology use to ignore to their parents.

10.-Children don’t develope the feeling of responsability.

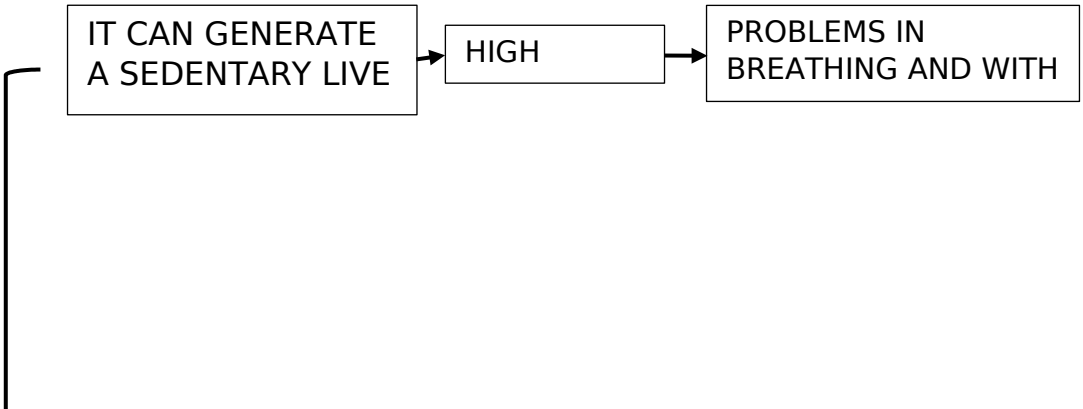

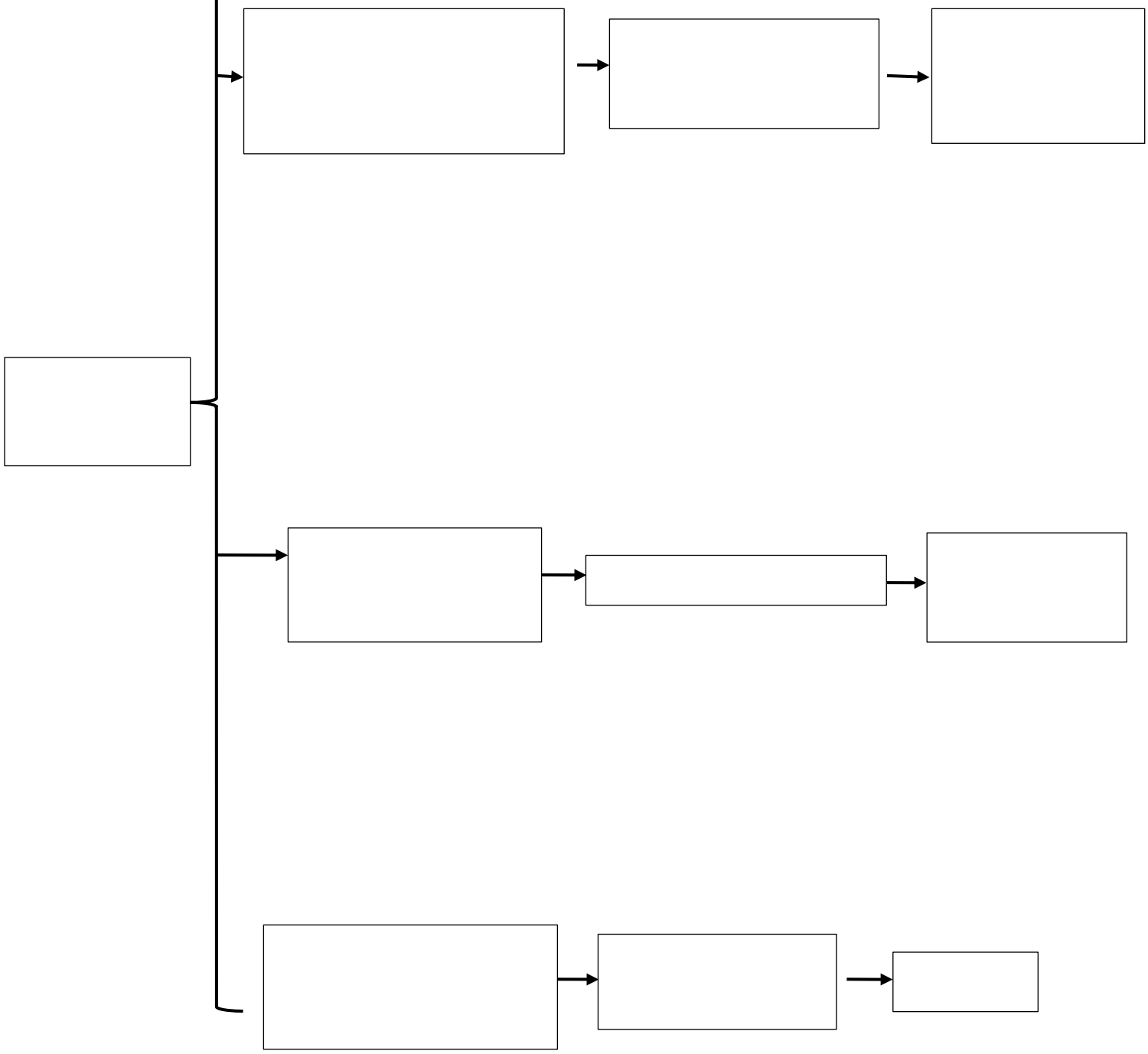

OUTLINE

INTRODUCTION

BODY 1

topic sentence: When children use cellphones without restrictions their phisic health get seriously affected.

supporting details

- Obesity
- Problems with the heart
- Breathing problems
- Bad posture

concluding sentence

BODY 2

topic sentence: Children arent concient about their actions and desicions, that's why they are psychological affected when use cellphones. (complete topic sentence)

supporting details

- social skills are affected
- cyberbullying*
- Compulsive behavior(adiction)
- Depression and axiety.

concluding sentence

BODY 3

topic sentence: The notion of responsibility is annulated by addiction to cell phones, so children are exposed to ignoring their obligations.

supporting details

- More tie with cellphone, less time studying.
- Preffer to do bad Jobs for school to play videogame.

concluding sentence

CONCLUSION

2 DRAFT

Children using cellphones. Nowadays the technology has enhanced and developed a lot. Cellphones, laptops, computers, tablets, etc. has been improving since 2005 and cellphones became popular quicly. Now, When I go to the restaurant or to the cinema I always see children using cellphones. Many parents aren't concient or just ignore

the effects of technology on their children. The use of cellphones on children is generating bad consecuences in their physical health, psychological health and responsability notion.

When children use cellphones or other technological devices without restrictions, their physical health gets seriously affected. Many parents need to work and they can't return early home to supervise their children, so most of children spend a lot of hours playing video games or watching videos. A consequence of it is the sedentary life and for this reason the children gain weight. Unfortunately, a result of obesity are bad posture, breathing problems and problems with the heart. Those problems become a factor or important aspect for depression and bullying at school. So children have to be controlled by their parents when they use any device.

The use of cellphones affect psychologically to children because they aren’t aware of their actions and the time that they pass with cellphones. Children, who pass hours on cellphones, doesn’t develop social skills to express their ideas or to make friends, that’s the reason why they just talk when they play virtual games. Many children show compulsive behavior because of the time wasted on cellphones. That compulsive behavior has to be treated carefully because wrong punishement can cause anxiety and consequently depression. Also depressions as a consequence of the feeling of lonelyness is dangerouse. The best decision that children can do is to turn off cellphones and turn on practicing any sport in groups.

The notions of responsibility is annulated by addiction to cellphones, so children are exposed to ignoring their abligations. According to a study published on the official page of the ONU, the 70% of children addicted to any devise comes up with excuses to pass more time playing videogames insted of doing thir homework. Because children prefer to pass time with cellphones, they pass less time studying. As they pass lless time studying, they get bad grades on the school. As a result of that behavior, they use to live without notion of responsibility.

Concluding, Children are seriously affected by the execive use of any technological device, but in especial cell´phones, because it produce obesity and problems with the weight, emotional and psychological problems and behavior of irresponsibility. In my opinion parents don’t have to tune out their children’s behavior and talk them into practicing any sport or participate in groups at school to develop skills like art.

WRTING TWO

Children using cellphones. Nowadays the technology has enhanced and developed a lot. Cellphones, laptops, computers, tablets, etc. have been improving since 2005, but cellphones became more popular than others. Now, when I go to the restaurant or to the cinema, I always watch children using cellphones. Many parents arent conscious or just ignore the effects of technology use in children. The use of cellphones in children is renerating bad consecuences in their physical health, psychological health and responsibility notion.

As children use cellphones or another technological device without restrictions, their phsysical health will be seriously affected. Many parents need to work and they can't return early to their homes to supervise their children, so most of children spend a lot of hours playing videogames or watching videos. As a consequence, they would have asedentary life and for that reason children gain weight. Unfortunately; as some results, children would have bad posture, obesity, breathing problems and problems with the heart. Those problems become a factor or important aspect for depression and bullying at school. So children have to be controlled by their parents when they use any device.

The use of cellphones affect psychologically to children because they aren't aware of their actions and the time that they pass with cellphones. Childrem, who pass hours on cellphones, don't develop social skills to express their ideas or to make friends; for this reason, they just talk when they play virtual games. Many children show compulsive behavior because of the time wasted on cellphones. The compulsive behavior has to be treated carefully because wrong punishment can cause anxiety; consequently, depression. These kind of children use to feel alone; as a consequence, the depression increasy. The best decision that children can make is to turn off cellphones and turn on the mind practicing a sport or reading books.

The motion of responsibility is annulated by addiction to cellphones, so children are exposed to ignoring their abligations. According to a study published on the official page of the ONU, the 70% of children addicted to any devise comes up with excuses to pass more time playing instead of doing thir homework. Because children prefer to pass time with cellphones, they pass less time studying and with their family. As they pass less time studying, they get bad grades in the school. As a result of that behavior, they use to live without notion of responsibility. Children aren't able to take good decisions, so they have to be controlled by their parents to avoid bad behaviors.

Concluding, children are seriously affected by the execive use of any technological device, but in especial cellphones because it produce obesity and problems with the weight, emotional and

psychological problems and behavior of irresponsibility. In my opinion parents don't have to tune out their children's behavior and talk them into practicing any sport or participate in groups at school to develop skills of art and reading.

UNIT PROJECT ADN FREE TOPIC PRESENTATION

WOMEN'S SOCCER

Soccer is one of the most important sport practiced around the world. Since the beginning of soccer as sport only men have been playing soccer, but lately women are starting to take place in that sport. The last week the world cup finished and women did a good job. Soccer can show that women can do anything that they propose, but there are disadvantages related to men's soccer.

I am really interested on women's participation at soccer because can show us that they aren't less than men. Also is easy to appreciate that women have talent to play soccer.

The most important benefit of women's participation in soccer is that the options to enjoy soccer increase. We know that male tournaments are most popular and objectively better, but is just time to see thaat women can offer good options when the male tournaments aren't working.
The second positive aspect is related directly with women. Historically women were understated in many sports, so that can be an opportunity for them to show that they can practice any sport in a high level.

There are many people that think women can't play soccer or practice a sport that requires physical conditions, but women are demonstrating that with perseveration they can compete.
A negative aspect that we can discuss is the fact that men's soccer is very competitive and historically has been improved and developed for decades, on the other hand, women's soccer has recently started to be promoted and practiced. I think that around the world there is a big distance between men's soccer and women's soccer and that maybe will not be eliminated. It could be a disadvantage for women who play soccer because of the amount of people who go to the stadiums and watch soccer, watch men's soccer because. As a consequence, women who play soccer don't have a competitive salary and this is a problem.

To conclude, Women's participation in soccer is really important to open our minds to enjoy diverse kinds of soccer and enjoy it more, also to recognize the value of womens and to see that there

disadvantages at the payment for women who play soccer. I think we have to contribute to women’s soccer to increase the competitiveness and create a good atmosphere for this sport.

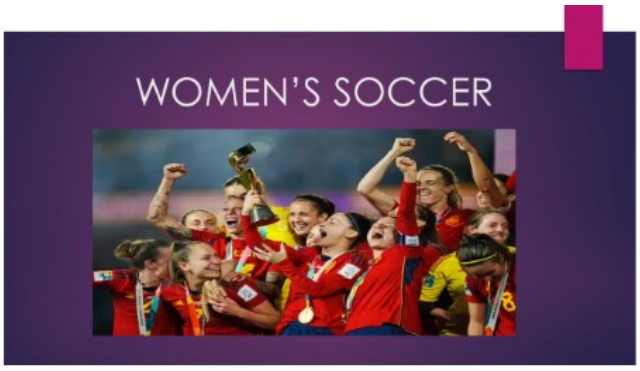

VOCABULARY	CONCEPT	SENTENCE
Boredom	It is a dislike feeling caused by a lack diversion	La cantidad de aburrimiento que sentí ayer en la reunión fue insoportable.
Absentmindedly	When a person doesn’t pay attention and is always distracted.	My mom is angry with me because I absentmindedly turned on the tv when she was talking to me about responsibility.
Orthodontist	Professional doctor about teeth.	My orthodontist recommended me to wash my teeth for two minutes after eating.
Addiction	A compulsive dependence or consuming dangerous substances.	My best friend is addicted to drugs, but his family is helping him to rehabilitate.
Reinforcement	Make something stronger or resistant.	My academy prepared a time of two weeks of reinforcement to help students to take the exam.
Proliferation	Increase in the amount or number of something quickly.	There was a proliferation of tourists in Peru after the movie about Transformers.
Beyond	Outside or after a stated limit.	Watching the map I can see that the movie theater is beyond these four blocks.
Compelling	Very strong or convinced evidence.	The lawyer showed compelling evidence of the defendant’s innocence.
Engage	To emply someone	I have engaged a lawyer to deal with a problem with my ex wife.
Soothe	To make someone feel calm or less worried.	When my cousin was going through a difficult situation, the company of my dog soothe her.

REFLECTION PAPER TWO

Preparing the activities like the research paper and graphic organizer wasn’t much complicated, but when I was writing the second writing I didn’t remember well the vocabulary words. But something that helped me was the graphic organizer to remember the vocabulary words that I used doing it. Those activities were very important and necessary for me to do good writing. Now I feel confident and convinced about the skills that I enhanced at this UNIT. I am sure that this unit was for me to develop habilities to write and do better essays.